THE DESIGN AND FABRICATION OF A HYDRAULIC PRESS FOR THE PRODUCTION OF KILN FURNITURE

AYODELE O. D. [1], AHUWAN A.M.[1], SULLAYMAN U.A.A.[1] & YAWAS D.S. [2]
[1]Department of Industrial Design
Ahmadu Bello University, Zaria
[2] Department of Mechanical Engineering,
Ahmadu Bello University, Zaria

Abstract
This research aims at exploring the possibility of using metal scraps obtained from second-hand metal scrap market to fabricate a prototype hydraulic press machine for the production of kiln shelves/pros. The machine is designed to be an improvement over the manual ramming one. To this effect, specific standard design methods and theories were employed to ensure its successful production. An initial design on paper was made as a working guide and later developed using Computer Aided design (CAD). Following this, all the scrap parts and other components such as steel of varying sizes, iron pipes, galvanized iron pipes, 20 tons hydraulic jack, 2hp motor gear, cross joints gear and box were assembled and welded together. In doing this, raw materials such as kaolin and secondary clay were sourced and brought to the studio for beneficiation and eventual composition of the test material used in test running the machine. Shelves and props were produced by the hydraulic press machine utilizing the semi-motorized and the fully motorized operations. Shelves and the props produced were fired to 1260^{0}C and tested for good performance using the modulus of rapture analytical procedure. Results showed that the semi-motorized approach produced 4 – 5 shelves within an hour as against 3 shelves in an hour using the manual method. The fully motorized device produced 7 – 8 shelves in an hour. This showed a significant improvement over the manual method of shelve production. The materials used in the formulation of the shelves equally suited with the production approach and yielded the desired bending strength, compressive strength, load bearing ability and durability.

Introduction

Industrial Design has over the years offered professional services including creating and developing concepts and specifications that optimize the function, value and appearance of products both for the manufacturer and the user. Right from the time of industrial revolution, there has been an increase and improvement in the design and fabrication of machines needed to meet basic domestic and industrial needs of individuals and companies. These needs have continued to increase and complex problems keep arising offering more challenges and needs.

It is observed that while the western world are abreast with these challenges, the developing countries, particularly Nigeria are not making sufficient strides to keep pace with this global trend of rapid industrialization aimed at solving domestic problems such as the problem of this research. The consequence is over dependence on foreign imports with its attendant cost; obsolesce of already existing equipment, complete breakdown

of such equipment needed in conducting teaching and research in our higher institutions and the sustenance of private studios across the country.

The researchers intend to bridge this existing gap and occupy this void by designing and producing a hydraulic press using scrap metals found in junk yards in some cities in Nigeria. This it is believed will in no small measure solve the problem of kiln furniture production encountered by students of our higher institutions where ceramic is offered particularly the female folk who find the manual method quite rigorous and sometimes unbearable.

Background of Study

Previous attempts have been made by researchers in the ceramic field to improvise the materials and equipment used for the production of kiln shelves, tools, machineries, and equipment for ceramic studios in the Nigeria. A visit to most art studios especially ceramic studios in many tertiary institutions bear attestation to this assertion. Most of these efforts have yielded positive results particularly in the areas of modeling tools, kick wheels and kilns. Research according to (Etuokwu, 2007) however revealed that, the situation in many other institutions is quite abysmal and pathetic as these facilities are non-existent.

The recent emphasis on the development and production of local equipment, coupled with the quest for self-reliance has generated the needed impetus for most researchers to delve into this area in order to offer the needed solutions to the problems plaguing the art studios particularly in our higher institutions of learning and also private industry owners.

The utilization of industrial wastes including the metal scraps for the production of useful products is a useful option advocated by (Rania *et al.,* 2001). It is observed that waste management system in Nigeria is very poor. According to Alkali, 2004, several waste materials including metals are seen littered all over the streets and waste disposal centers. Very little waste recycling methods and policies are advocated either by government or private organizations. Where this is done, it remains at policy levels with little activity towards the actualization of such polices.

Recycling in the context of this research involves the re-use of waste metal scraps for the fabrication of equipment needed in the running of ceramic studios. Thus, this study is set to work towards converting some of these metal scraps to useful objects or parts for the production of semi/fully motorized hydraulic press for the production of selves and props.

Methodology

This research utilized experimental methodology through population of the study, material beneficiation, pilot study, sourcing of metal scraps and tools, formulation of refractory materials and the final production and testing of equipment produced and the products that were produced with the machine.

Standard design calculations were used to develop the design of the equipment. The design drawing was then used in the fabrication of the machine. The functional machine components were either fabricated as indicated on the design or purchased as scrap from the market. Most fabrications were carried out in the engineering workshop at Ahmadu Bello University, Zaria, Femi Engineering Works at Dan Magaji Zaria or at Lukman Engineering Works at Palladan, Zaria.

Sam/pro hydraulic compressor was studied and improved upon to serve as a major component of this equipment. Two 20 tons hydraulic jacks for its semi and fully motorized design were obtained. Before the actual fabrication of the equipment, preliminary drawings as already stated were done. Drawings of the

various components of the machine were done using the Computer Aided Design (CAD) with the AutoCAD Software and sketch up. These drawings were broken into various components and the fabrication carried out accordingly. In carrying out this project, the following considerations were made. These were:

(i) Putting to the fore the problem intended to be solved.
(ii) deciding the kinetic arrangements of machine parts and the analysis of their motions.
(iii) Determining the nature and the forces of their magnitude on different element of the machine.
(iv) Selecting the proper materials for each element of the machine and determining the allowable stresses in the different materials.
(v) Determining the size of each element in the machine with their detail drawings.
(vi) Selecting the most economical manufacturing process.
(vii) Fabricating prototypes and testing it performance.

All these design considerations were put forward as the actual fabrication process began. The first process was the construction of frames for the moulds for the shelve production. A 39mm high and 12.70mm thick angular bars were obtained and construction done with its size measuring 280mm x 425mm; this frame was done in order to house the material fed to it at once rather than refilling it at intervals as done in the manual ramming method.

Next in process is the construction of the frames which holds every component of the machine together. The frame is divided into these components namely:- the slide, the top and the bottom braces. The galvanized mild steel angle iron lengths of 1950mm with 100mm x 100mm x 10mm (L-section) I beam length of 220mm with 100mm x 50mm x 10mm (I-section) were used. Each length was drilled to have twelve holes of 27mm in diameter having an interval of 100m centre to centre. Two pieces of mild steel angle iron of 200mm length of the L-section were cut and welded to the top and side brackets for firm grip to form a cuboid-shaped frame. Four pieces of mild steel angle iron of equal parts, measuring 680mm in length of the L-section were used for the top and bottom brackets. I beam of 400mm length of the I-section was further used as reinforcement of the top roof bracing. A plate of 100mm x 100mm x 10mm was cut, and drilled to allow for 32mm diameter bolt and welded to the top bracket. Two pieces of the mild steel angle iron length of 990mm were cut and the side sliced to the angle of 55^0. These two pieces of mild steel metal were welded to the side frame as the base bracket. Other component construction and their operational sequence were done and the entire machine was coupled and test run.

Results

Product Design and Fabrication

The design was initially carried out on paper and later developed using Computer Aided Design (CAD). This is evident in the proportional relationships of its parts to the entire structure. Its stability and ruggedness after construction, using the Computer Aided Design Dimensions with the use of mild steel (low carbon) and high carbon steels, were successful. This is because all the shelves and props produced were well compacted and the entire machine still maintained its ruggedness and intactness. Following the precision of the AutoCAD dimension was highly successful.

The performance of the machine was tested using various shelf compositions (See Tables I and II) as well as testing for modulus of rupture (MOR) and the compressive strength test (CST) to ascertain their strengths (See Tables 3

and 4 for MOR and 5 and 6 for compressive strength).

Test Run of the Fired Shelves and Props under Load in a Kerosene-fired kiln

According to Sullayman (2006), the ability of refractory to bear, carry or withstand a specified load while in use under heat conditions is usually referred to as the refractoriness under load of the refractory. He further asserts that test value of refractoriness under load are more valuable and of more practical significance than that of the mere refractory. Sullayman (ibid) further states that in determining the refractoriness under load, the refractory material is subjected to a load of 2kgf/cm^2 (29Ibf/in^2 or 1.93 x 10^2 N/m^2) for fireclay or aluminosilicates. This he said has to be done at strictly observed and uniform heat rates.

In line with Sullayman (ibid) the produced and fired shelves/props (See Plate 4) were further tested in the kerosene fired kiln by loading ceramics wares above 2kg on them and fired to 1250^0C using cone 9. All the ceramics pieces arranged on them fired well. The shelves and props were successful, no warpage, edges were very smooth and intact (See Plate 1), except for the composition I Test ID that had rough edges and also chipped off. This could possibly be due to the inadequate binders in its composition (30% binder to 70% grog of large aggregate, using 9.5 mm sieve) coupled with the inter particle friction which tends to hinder the pressed compact away from the ideal packing configuration, resulting in a reduced density (Wenjea, 1995, See Fig. 1). This explains why composition I test ID of table 3 recorded mostly the least braking load or MOR test compare to other tests on the same table. This result under discussion also signifies a high relationship of success with the objective 3.

Conclusion and Recommendations

1. It is evident from the outcome of this research that the possibility of using locally sourced materials for hydraulic press development for use in cottage ceramic industries/institutions of higher learning is achievable.
2. It is also evident that the design and fabrication of the semi and the fully-motorized hydraulic jack is quite effective in the production of ceramic kiln shelves for higher institutions of learning as well as cottage ceramic industries as an alternative to the manual ramming approach.
3. Further research should be carried out to assess higher destructive properties of shelves through mechanical properties such as modulus of rupture test and compressive strength test.

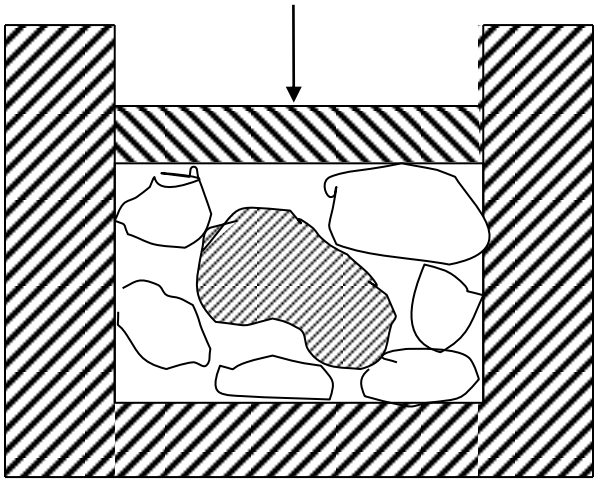

Fig. 1: Particle interactions in dry pressing
Source: Wenjea (1995).



Figure 2: Manual ramming method used in Shelf Production
Source: Studio Practice



Figure 3: Manual ramming method used in Props Production
Source: Studio Practice

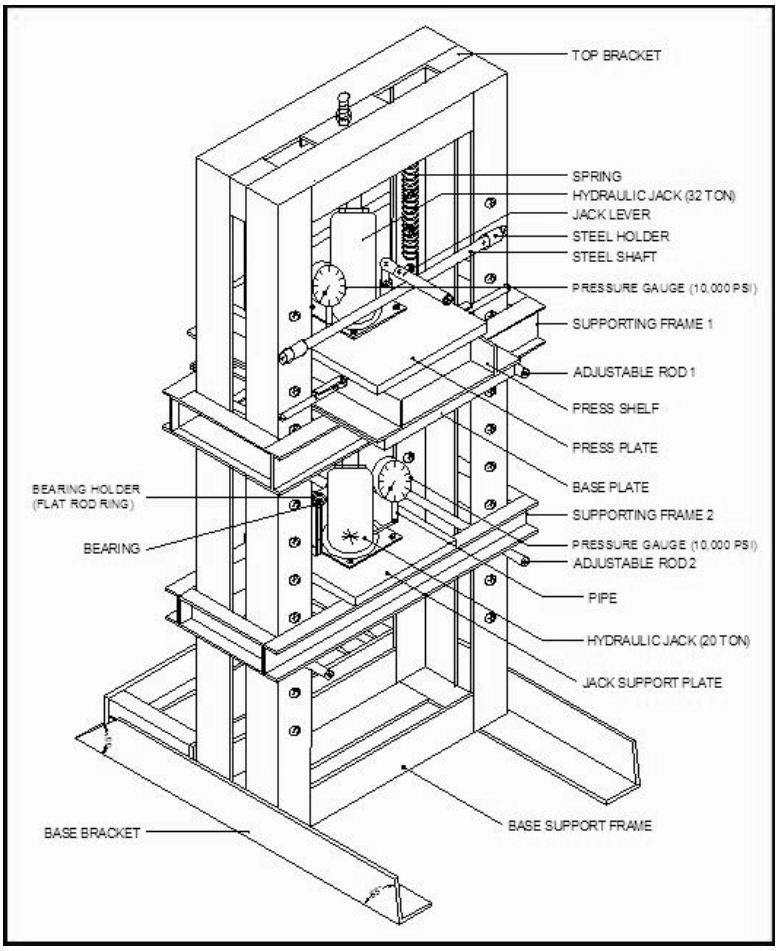

Fig.4 The Hydraulic Press Machine
Source: CAD and Engineering Workshop Construction by the Researcher.

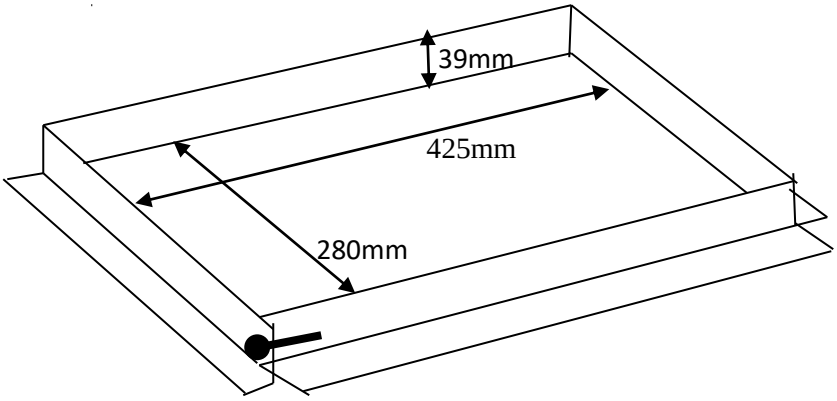

Fig. 5: The Angle bar Frame Size commonly used is 39 mm

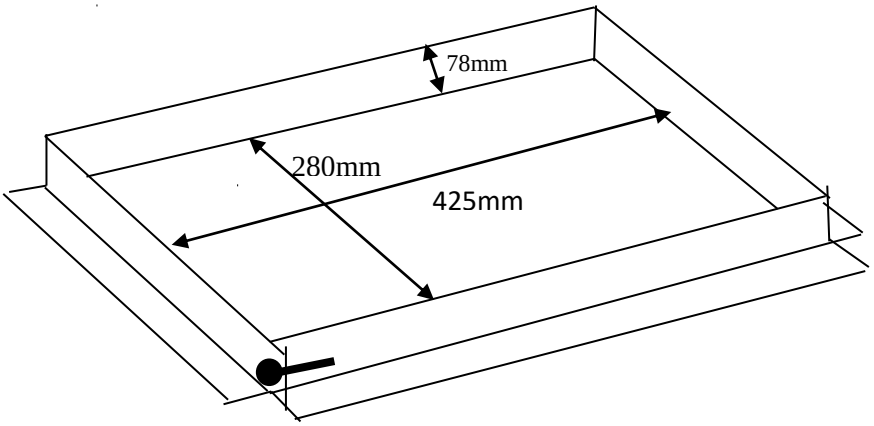

Fig. 6: Angle bar Frame Size Experimented upon having 78mm in height



Plate 1: Showing Successfully Fired Ceramics Wares Using the Produce Shelves/Props
Source: Original Research Photograph Ayodele (2013)



Plate 2: Guiding for the proper fitting of the top metal plate into the angular frame containing shelf materials using semi-motorized mechanism



Plate 3: The assembled machine/Pressing of Prop in Progress



Plate 4: Shelves Produced using Manual Ramming/Semi-Motorized Method



Plate 5: Front View of the Design Machine

References

Ahuwan, A. M. (2004). *An Analysis of Traditional Pottery as a Veritable Instrument In Vocational Occupation in Contemporary Nigeria: A Case Study Of Katsina and* Zaria. Ashakwu Journal of Ceramics, Ceramic Association of Nigeria. Vol. 1 No. 2. Pp .62-67.

Ayodele, O. D. (1999). The Utilization of Locally Available Ceramic Raw Materials for the Production of Balusters for Balconies and Staircases. Unpublished M.A. Thesis, Ahmadu Bello University Zaria, Nigeria.

Ayodele, O. D. (2008). Insufficiency of Facilities and Equipment as Obstacle to Self-Reliance in Industrial Ceramics Arts Courier African Journal of Art and Ideas No.7 pp38-42

Datiri, A. (1998). The Development of Diesel Burners for Ceramic kiln Firing Unpublished M.A Thesis, Ahmadu Bello University Zaria, Nigeria.

Ebeigbe, S.U (1990): Glazes from Local Materials in Nigeria, Experiment with Feldspar and Cement. Unpublished M.A. Thesis, Ahmadu Bello University Zaria, Nigeria.

Ewule, J. O. (1988): Development of a Model Gas kiln for Ceramic Production from Local Resources. Unpublished M.A Thesis, Ahmadu Bello University, Zaria, Nigeria

George, C. (1991): Lesser Machining Theory and Practice. Spring-Verlag New York. P.4

Gonah, C. M. (2003): Design and Fabrication of Ceramics Glaze Materials-Processing Machine, Ashakwu Journal of Ceramics, Vol. 1 No 1. Zaria, Dasma Press Pp 85-87

Gonah, C. M. (2001): Sourcing for Local Raw Materials for Glaze- DIGITARIA IBURUA Ash, a good prospect. Glass Technology, Ahmadu Bello University, Zaria. Pp 3-4

Harms, R. H. and Swernofsky, N. R. (1999): Technology Interactions, New York, Glencoe/McGraw-Hill

http://www.idsa.org retrieved 04/12/2010

Jerome, G. (1979): Recycling, How to Re-use Waste in Home, Industry and Society, USA, Schocken Books, pp. 151 – 160

Kamenschchikav, G. (1970): Forging Practice. Moscow Mir Publishers. P 470

Khurmi, R. S. and Gupta, J. K. (2005). *Machine Design*. New Delhi, India. Eurusia Publishing House (pvt.) Ltd.14th Ed. Pp . 728 - 732

Molokwu, M. G. (1991): Production of Refractory kiln-shelves and Props Using local Materials. M.A.Thesis, Ahmadu Bello University Zaria.

Morakinyo, A. D, Sullayman, U. A. A. and Yawas, D. S. (2013). *The Design and Development of Tiles Making Machine*. International Journal of Engineering Research and Technology. Gujarat India, (IJERT) ISSN: 2278-0181 Vol. 2 Issue 8

Morakinyo, A. D. (2012). The Design and Fabrication of Tile Making Machine Unpublished M. A. Thesis, Ahmadu Bello University Zaria, Nigeria.

Nagpal, G.R (2002). Machine Design (3rd ed.) Delhi, India: Khana Publisher

Smith, (2003): Microsoft Corporation, retrieved 04/12/2010

Staurt, P. (1996): Creating Innovative Products Using Total Design, USA: Addison WesleyPublishing Company Inc.

Sullayman, U. A. A. (2006): "Utilization of Local Raw Materials for the Production of Dense Aluminosilicate Refractory Bricks for Blast Furnaces Using Semi Dry Pressing Technique". Unpublished Ph.D Thesis, Department of Industrial Design, Ahmadu Bello University Zaria. Pp 95-102

Wenjea J.T. (1995). *Ceramics Processing (An Introduction*). National Chung Hsing University wenjea@dragon.nchu.edu.tw

Wormald, P.W. (2003): Microsoft Corporation, retrieved 08/11/2010