# THE DESIGN AND DEVELOPMENT OF CLAY EXTRUDER USING THE LOCAL CONTENT TECHNOLOGY APPROACH

**KOLADE J. O.**
School of Art, Design and Printing,
Industrial Design Department,
Kogi State Polytechnic,
LOKOJA

**Abstract**
*Man's distinguishing characteristic is that he is a "maker". He has always made things to meet his needs, and the more he makes the more his need becomes. The things he makes range from those which meet his physical, material and social needs. In the cause of mans effort to meet his needs machine development came in. This paper aimed at introducing re-introducing extruder as it is nearly becoming extinct in some of the art schools in Nigeria. The researcher is aims at reactivating the usage of extruder. The paper dealt with how you can construct your own extruder at a very low cost, with the installation, uses, maintenance and the benefits of extruder to ceramics studios and schools.*

**Introduction**
Pottery can be traced back to the Stone Age period when cooking became necessary. Since the beginning of pottery man has been trying to find solution to those problems associated with pot production. Kolade (2001), Lakeside (2013) opines that pottery began in the Paleolithic time with hand – moulded pots that were baked in the sun or in camp fires.

Gradually implement and equipment began to creep in into pottery as it started growing, just as pen and biro cannot be underrated in the life of a secretary, so also equipment are so important in pottery for the smooth and quick production of wares. Pottery can never be pottery if equipment and tools are not used. All equipment and tools have their collective and individual function that a potter has to use them to really get what he desires in his pottery wares.

Since the demand for pottery gradually increased and the market enlarged this probably led to the introduction and incorporation of scientific technologies into pottery. Thus, in 19$^{th}$ and 20$^{th}$ century pottery became mechanized and there came an impetus for the development and invention of scientific tools and equipments. These are now being used in pottery to produce wares of unequalled beautify and functionality. As modern ways of producing pottery are growing day by day, like wise ceramic equipment are being fabricated locally by individualsand groupsin line with that also in institutions of higher learning such as Universities, Polytechnics and Colleges of Education for research purposes and also for their use. In ceramic technology, many equipments and tools have been invented and produced to improve production. Equipment made pottery easy and effective in terms of production.

**Clay Extruder**
Clay extruder is a device or a mechanical apparatus manual or electrical used to produce objects with a cross - sectional profile. Extruder can be referred to as a designer aid and at the same time it can also be called a contributor for building components in ceramics.

Baird, (2010) gave the description of extruder as a clay tool which help to shape patterns for the clay studio and they are super fun to

use. According to Lauran, (2010) clay extruder is a great tool for creating long strands of clay in specific shapes in near perfect consistency. According to Jacobson, (2012) the clay extruders are mostly made of plumbing fittings, available at a local hard ware store or at junk markets. There are several advantages for making the extruder yourself. The cost of production will be very low and it can be made according to your own specification and also, each part is easily and cheaply replaceable when needed. Over the years clay extruder has not being popular in the country and not even readily available in the Nigerian markets just like the other ceramic equipment, except an order is made for such equipment from oversea and it is always very exorbitant due to foreign exchange rate. This is why it is so expedient to fabricate your own extruder that is easy to use by any successful ceramist in the country.

The main parts of an extruder are the handle, plunger, a barrel, and dice. The material for extrusion is forced through the cross – sectional shape of the dice opening. The shape and size of extruded clay shapes can be customized depending on the purpose and the user. Clay extruder helps the operator to have consistently sized and shaped coils and patterns and it also saves time and conserved energy Kolade, [2001]. According to Baired, (ibid) this vesicle tool was relatively unknown back in the 1970s. Ceramic extruders are so important and as a result of this it has become indispensable tool for thousands of potter and ceramic artists who know the importance of it all over the world today. Extruder can do things not possible with the throwing wheel machines and hand built. It can produce hundreds of shapes and forms including hollow forms if it is well manipulated.

**Materials and Methods**

The following, materials are needed and were assembled for the construction of an extruder these are: a drilling machine, manual or electric with the drill bits, a vise for holding pipe for cutting, metal punch, grinder with two type of stones such as cutting and grinding stone, sand paper, flat bar, bolt and nuts, welding machine, electrode, files, arch saw with blade for cutting, spanners, round pipes and square pipe.

**Fabrication**

Two types of clay extruder were fabricatedalthough the usage of the twois the same; the major difference is in the construction and mode of operation. In this paper the types, fabrication, the dies, the uses with the maintenance will be discussed.

The clay extruder is constructed with galvanized pipes of two sizes. The main cylinder or tube unto which clay is loaded is the wide one; it is about 5.2mm wide and about 30.5mm long. It has an open cork at the bottom where the dies could be inserted and with two keys at the two sides where bolt and nut are used to hold the cork from falling off the cylinder. In the largest cylinder a pipe of about 45.8mm is inserted with a hard thick fabricated round metal, which presses the clay through the inserted die. There is another long pipe about 58.4mm also welded to the side through 2.5mm pipe, two in number, which stands as a holder for the presser's handle or plunger. There is another pipe for the handle it is about 53.3mm long where a machine turtle cover is inserted for easy holding. Two pipes of 3mm are fabricated into a 'T' joint, which form the fulcrum for the handle for easy operation of the extruder. A flat bar of 10mm in length was also fabricated and welded to the back of the round extruder having two holes for bolting the equipment into the stand.

Wad box is the same thing as the other extruder in function because they both extrude clay shapes through the inserted dies. The difference between the two is the method of operation. The driving material of wad box is inform of wheel or steering that is to say it is in circular form or it could be in form of 't' shape at the top instead of the pressing type in the round extruder. The one constructed for this project is a wheel type.

This is made of square hollowed metal pipe of about 10.2mm in to in. the pipe is cut into 25.4mm long, having an open cork at the bottom to secure the dies and clay from falling off the box. There are two pipes at the two sides of the box one welded to a side each with two 2.6mm long pipe which hold the wheel at the top through two bolts, one at each sides of the two. The wheel is a circular metal made with a rod and having another rod across at the middle and having a

30.5mm long jack as a driving force where a flat metal is welded to the tip of the jerked rod through a bearing to serve as the presser. At one side, there is a flat bar attached with three holes which serves as the attachment point to the stand.

**The Die**

The dies of these extruders were made with different types of materials such as plastic, metal plates, and plywood. The dies for the round pipe extruder are round in shape while the one of the square pipe were cut in square shapes. Different shapes and patterns were made on the dies; round, square, hexagon, and other pattern and shapes meant for pot decoration. The dies are quickly interchangeable.

Forty-two dies were fabricated with the two extruders and these are to produce different patterns from one another except the coil producing ones which are of the same shape but with different sizes. You can also cut out dies from clay and fire it, which is also very good for extrusion but it is only fragile Lucien, (1981).

**Installation**

The clay extruders can be mounted to either a wall or bench especially the round pipe one while the square pipe extruder can be fixed. The stand is made of wood and painted with emulsion paint first and later coated with brown gloss paint, which makes it look like a metal stand. The extruders are bolted to the stand.

**Finishing**

After fabrication of the extruders, the welded points were grinded with grinding machine. They were painted with aluminum paint two times with brush the first painting was priming in other to prevent corrosion and the last painting was to bring the beauty out.

**Mode of Operation**

The cork at the bottom of the extruder is to be removed and the required die is to be inserted inside the cork, then couple back and bolt to prevent the dies, the cork and clay from falling off. Pull up the handle and the plunger pipe or even remove it for convenience sake and load the cylinder with balls of clay, after loading insert back the plunger and slowly press the handle down to see the pattern and shape that comes out through the cork based on the shape of the die inserted.

In the case of the squared shape extruder you unloose the point of attachment of the stirring to the extruder and load with clay, that is, after the required dies must have been inserted like the other extruder. Start to drive the stirring wheel until the clay starts coming out at the base through the cork. When the shape comes out it can be cut out to the sizes needed.

The more you use extruder the more you get familiar with the techniques that are involved in the operation and production. And new ideas also will be coming up as time goes on. One does not need great mechanical know-how.

**Extrusion Material**

Clay is the major material use for extrusion in extruder, almost all the clay can be push through the extruder but with the trial of different state of clay I discovered that some clay bodies are better suited to extruder work than others.

The clay for injecting forms in extruder must be a well prepared one, the proper purged and de-aired clay work best in the entire test. It shouldn't be a new or coarse one. The clay must be a one with fine – grained and it should be well aged Scott, (2014). Too soft and poorly wedged used clay use to tear and also have air bubbles in it as it is extruded. Hard clay is also bad for extrusion because it can cause damage to the extruder due to stress on the equipment.

**Benefits of Extruder**

- In academic settings it can facilitate teaching and learning processes.
- Pots can be easily hand built with coils produced from extruders.
- Pots can be decorated with the shapes and patterns produced by it.
- Slabs of moderate width can be produced with the extruders.
- Easy construction of lettering.
- Cup and jug handles and sprouts can also be made with the extruded patterns instead of hand pulling shapes.

- Different patterns and shapes can be extruded from solid to hollow shapes for different ceramic designs.
- Fabrication of extruder can become a source of revenue if mass produced for commercial purposes.

**Maintenance**

There is a need to maintain the extruders for make it to last long and also for effectiveness. The fulcrum and the jack of the extruders must be greased regularly. There is a need for clean up after everyday use to prevent rusting of the equipment. The remaining clay inside the tube should be emptied and the barrel washed when necessary, it can also be left dried and the dried clay will be knocked out of it before washing. Dies must be kept clean by washing with water and greased when necessary after every use. Dies should be slotted in correctly to prevent breakages and broken ones should be replaced promptly for the next use.

**Summary and Conclusion**

Extruders have been found to be efficient in ceramic production by the Ceramists who have the opportunity to use them. Production of coils has been made easy; pot decorations are easier and better. Easy cup handles and sprout for those who cannot pull handles effectively.

**Recommendations**

I wish to recommend to whoever may be working on this type of fabrication that there is a need to increase the cylinder of the extruder, that is, the cylinder should be larger in other to contain more clay so that frequent loading as a result of the thin cylinder will be minimized. I am also of the opinion that electric motor should be introduced to power the extruder in other to make it motorized equipment for easy operation. I also recommend that more dies of different shapes and patterns should be worked upon and even the hollowed producing once can be added for a better production.

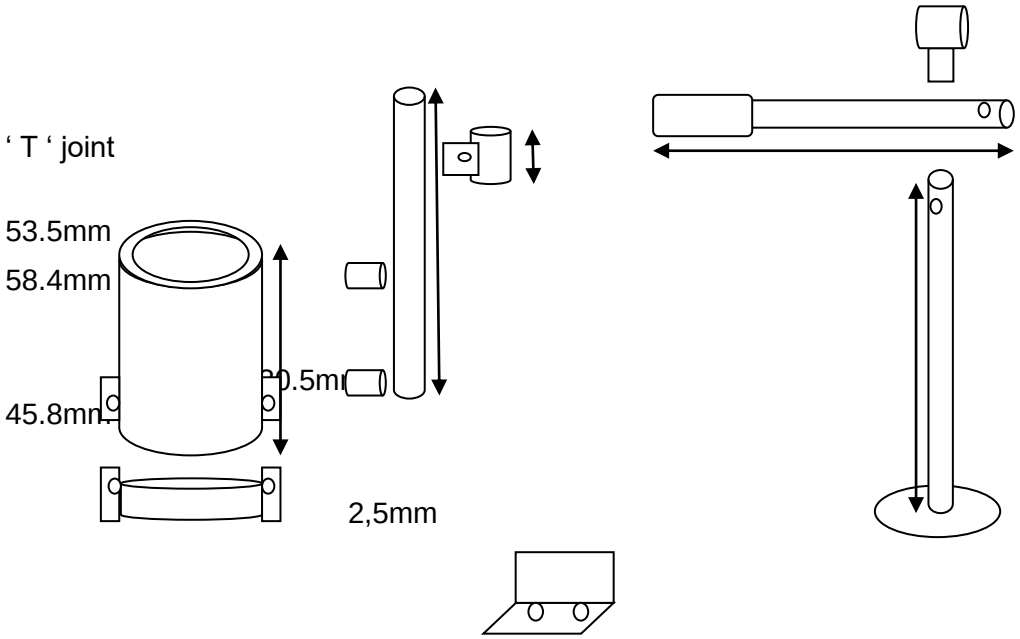


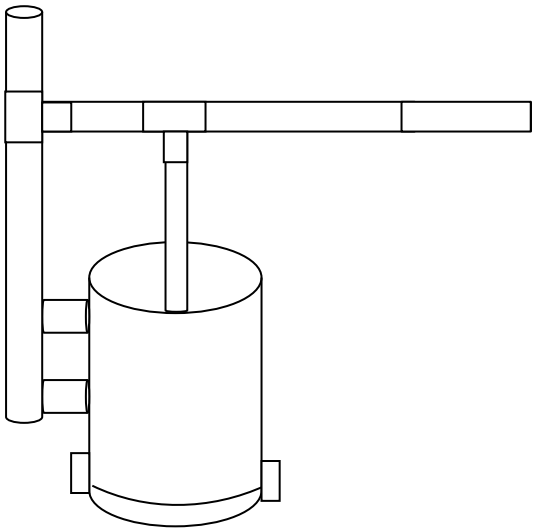

Galvanized Pipe Extruder

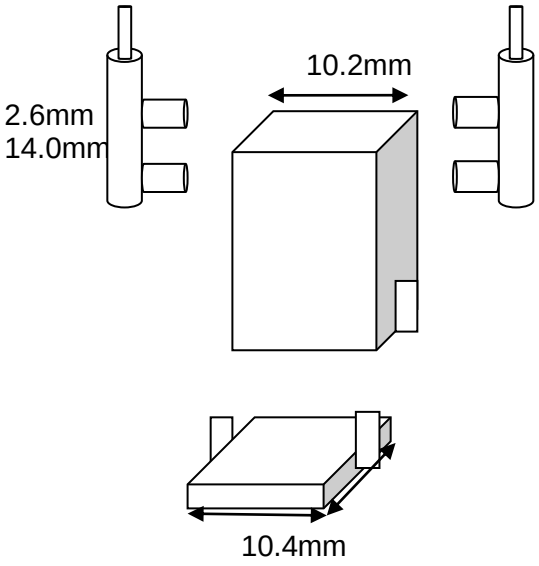
10.2mm
2.6mm
14.0mm
10.4mm

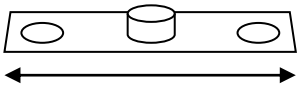

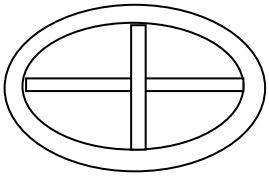

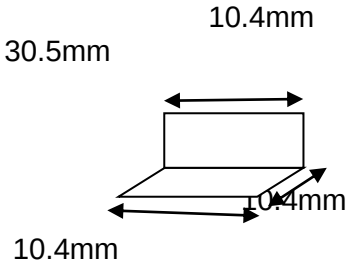
10.4mm
30.5mm
10.4mm
10.4mm

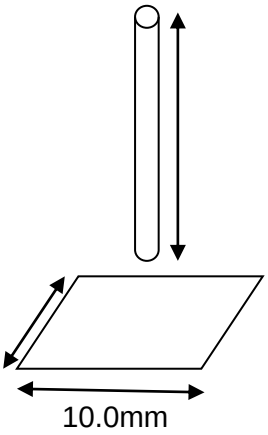
10.0mm
10.0mm

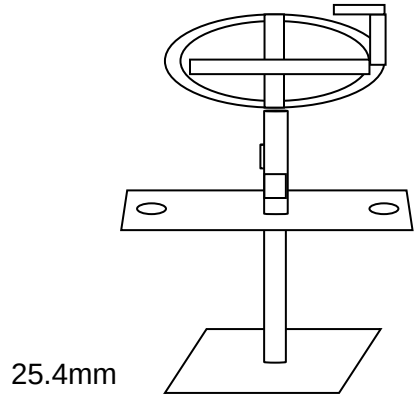
25.4mm

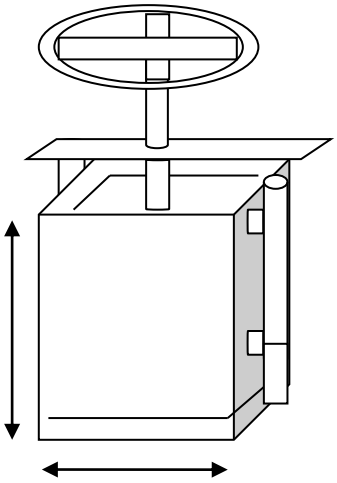

10.6mm



Samples of the Dies

**References**

AMACO, Equipment and Suppliers for Pottery, ceramics, Enameling Crafts, Pages 30-31, American Art Clay Co, Inc. 4717 M. Sixteenth Street Indiana Polis, IN 46222.

Asa, B., (Editor) (1989). Longman's Encyclopedia; Longman Publishers, London Pp 853 - 854.

David. H., (1997). Cheap, Extruder Plans. www.potters.org/org/subject01680.htm

Daryl, E. B., (2010)The Extruder Book, Second Edition. Ceramicartsdaily.org/wp-content/uploads/2014/03/ExtruderExcerpt.pdf

Getting Started with the Ultimate Clay Extruder, Cool Tools. www.cooltools.uspfiles/product-Utimate -Clay-Extruder-Instructions.pdf

McGraw-Hill (1908): New American Machinists Handbook; Hill Publishing Company, New York, U.S.A., Pp 1 - 25, (Section 25, i.e. 25-1 to 25-52).

Groillers E. D. (Editor) (1829): Americana Encyclopedia International Edition, Volume 6; Golliers Incorporation Inc. New York USA, Pp 195 - 197.

Hadar, J. (2011). How to make your own low- cost clay extruder. Art in Metal Clay artinsilver.com.hadar@pacbell.net

John, G. (2014 ). The Extruder as Design Tool: An Expanded Usage.

Kolade, J. O. (2001). Construction of Talisman Extruder (Ceramic Equipments), A thesis submitted to The Department of Fine Arts, Faculty of Environmental Design and Management ,Obafemi Awolowo University
(O.A.U) Ile- Ife.

Lucien, M. K. (1981). Technicalities and Aesthetics of Clay Extrusion for the
Artist / Potter. A thesis submitted in partial fulfillment of the degree of
Master of Fine Arts in Art in the Graduate College of the University of Iowa.

Laurie Primmer, A. T. D. Pottery Made Simple; W. H. Allen, London, U. K.
(1974). Pp 243 - 261.

Scott Creek Pottery- Scottcreek Pottery.Net. 2634 Pioneer Way East Tacoma, WA 98404. www.scotcreekpottery.net/images/scp-brochure.pdf

http://www.polymerclay.com/dreammachine.html

http://forums.belphiforums.com/n/main.asp?wedtag=polymerclay&msg=70225.1&gid=2009904138.

http://artway.businesscatalyst.com/products/artway-tools/Extruder/hobby-extruders

http://www.beadworx.de/2012/07/03/the-pixelated-retro-blend-cane/

http://knighttwork.blogspot.com/2012/05/bis-border-cane-tutorial.html

Clay Extruder Users Guide.
www.brainharperstudio.com/claybucket/cadaily-extruder.pdf