DESIGN AND DEVELOPMENT OF COAL-FIRED FURNACE FOR RECYCLING OF WASTE COPPER WIRES USING REFRACTORY BRICKS

UDOKA J. E.[1], AKPERE E. A.[2] and MORAKINYO A. D.[3]
[1 & 2]Department of Mechanical Engineering,
Modibbo Adama University of Technology, Yola
[3]Department of Industrial Design,
Modibbo Adama University of Technology, Yola
email: abrahamolushola@yahoo.com

Abstract
Insulated bricks are one of the highly utilized bricks in the production of kilns and furnaces. A coal fired furnace was designed and developed for recycling of waste copper wires. Materials such as kaolin, sawdust, mild steel et cetera that were selected and used for its development were properly screened because of the function of each component to meet design requirements and to avoid failure in service. Standard bricks were produced, fired to 1280°C and used to build the furnace which was eventually padded with mild steel. Welding process was used to join the mild steel, Bolts and nuts were used to aid disassembling in times of maintenance. The coal-fired furnace was tested to melt recycled copper wires using charcoal as the main energy or fuel. The following observations were made: 0.5kg of the recycled copper wire melted after one hour thirty seven minutes (1:37hr) using charcoal of mass 5.3kg; the weight of the copper after melting reduced to 0.4kg with impurities of 0.1kg. Also, 0.4kg of copper melted after one hour twenty minutes (1:20hrs) using charcoal of mass 3.7kg and the weight of the melted copper reduced to 0.33kg with impurities of 0.07kg. The experiment was successful and this proves that furnaces can be produced using our local materials to aid practical experiment in the laboratory. This would further give trainers and students a real experience in/of the industry.

Introduction

Copper is a reddish-yellow metal, it is ductile and malleable; it is readily fashioned into copper wire, tubing and sheets. Copper is the best electrical conductor among the cheapest metals, but when used for this purpose it must be quite pure, since small amounts of impurities greatly reduce its conductivity (Courtney, 1980). The extensive uses of copper make it the metal second in commercial importance to iron. The chief use of copper is in the production of all types of electrical wiring. Copper is also used in the production of a great many alloys. Copper has a melting point of 1083°C, Boiling point of 2567°C, Atomic mass of 64amu (29 numbers of protons and electrons, 35 numbers of neutrons). It has a cubic crystal structure with a density of 8.96kgm^{3} (Holtzclaw and Robinson, 1988). Most times copper is melted in high temperature furnace produced from ceramic refractory materials before it's used.

A melting furnace is a type of equipment used to heat materials, usually for an industrial application. They generally differ in terms of the types of materials they can heat, the temperatures they can generate, and how they function. Some of the most common types of furnace are electric arc furnaces and crucible furnace. Furnaces have been used by people for a very long time. The earliest furnace is believed to have originated with the Indus Valley civilization of Indians between 2500 and 1800 BC. The melting furnace is an industrial version of this concept and is typically used for the production of specific materials or as a heat source (Maurya, 2002).

Some industrial scholars consider furnace to be the most historically popular device that produces heat, which are used in the home for warmth and in industry for a variety of purposes such as smelting steel and heat treating of materials to change their molecular structure (Courtney, 1980).

A crucible furnace is a furnace specially designed for use with crucibles that are large containers of fire-resistant material used to hold products while they melt so that they can be worked on. Crucible furnaces are made up of a wide variety of products, ranging from handmade crafts to industrial equipment. Some focus on specialty applications while others make general purpose products for their customers.

The crucible furnace has a spacious interior made with a lining of refractory materials. An outer casing retains temperatures inside and makes it safe to work around the furnace when the heating elements are in operation. The operator places the filled crucibles inside, seals the furnace and fires it to melt the materials. Crucible furnace safety requires users to wear protective garments (overall) and eye wear (goggle) when the device is in operation. Garments can prevent burns, while goggles keep the eye safe from bright light as well as splash back (Maurya, 2002).

The need and economic importance of the development of a traditional small scale furnace for melting, heating and other metallurgical and engineering manufacturing processes becomes obvious. This is due to the continuous dependence of the nation on imported materials. It has also been observed over years that the states of laboratories in Nigerian Tertiary Institution have not measured up to the required standards in terms of equipment because of the present economic recession. This problem makes it difficult for students to understand what they are taught in the classroom, and upon graduation, they cannot perform to the required expectation of their employers. This situation calls for urgent measures to improve the conditions of our laboratories in order to aid the practical aspects of the learning process and to provide a basis for further research.

This research necessitated the design and construction of a coal fired furnace for recycling of waste copper wires; small enough to fit into the laboratory. This would aid in the recycling of waste copper wires using crucibles made from available local ceramics materials like kaolin. This work would help bridge the gap to some extent between theoretical knowledge acquisition and practical skills. This would further give researchers a practical expertise on how materials are recycled. It will enhance the production of high quality graduates for the labour market. Towards the success of this work a ceramist and a chemical engineer work in synergy to design, develop and produce this furnace locally. This brings to fore a synergy as per an inter-disciplinary pursuit to aid sister profession to accomplish a vital task within the university system.

Types of Furnaces

The first electric arc furnaces were developed by Paul Heroult of France, with a commercial plant established in the United States in 1907. The furnaces are classified according to different criteria, such as; Combustion type furnaces and Electric type furnaces. The combustion type furnace is further classified into oil fired, gas fired and coal fired. While the electric type furnace is classified into induction furnace and arc furnace. The induction furnace is a furnace used largely to produce tool steels, stainless steels and the numerous steels designed to resist heat, corrosion, and abrasion. It is very adaptable to steel making processes involving vacuum treatment. There are two types of induction furnaces; the coreless induction furnace and the channel induction furnace.

Coreless induction furnace consists of a water cooled helical coil made of a copper tube, a crucible installed within the coil and supporting shell equipped with trunnions on which the furnace may tilt. Channel type induction furnace consists of a steel shell lined with refractory materials and an inductor attached to the shell. There is a channel connecting the main body with the inductor (Substance and Technology, 2012). The electric arc furnace is a furnace that consists a circular steel casing lined inside with refractive materials. The roof is removable and the scrap is commonly charged from the top of the furnace. The roof is provided with

three holes through which the electrodes are passed (Ibrahim, 2012).

Furnaces based on Mode of Charging Materials

The batch type or periodic type furnace are: Forging furnace, Re-rolling mill furnace and Pot furnace.

Forging is the term for a process by which pieces of metals are squeezed or hammered to various shapes. Forging furnace is highly efficient heating furnace used for forging with an open fire place system through which heat is transmitted. The temperature maintained inside these furnaces is around 1200°C to 1250°C (Enggpedia, n.d).

Re-rolling mill furnace is a furnace that is used to heat scrap, small ingots. The temperature maintained inside is 1200°C, the charging and discharging is done manually. The products when passed through rollers are made longer and thinner and their properties are modified (Enggpedia, n.d).

Pot furnace is also known as crucible furnace. The crucible furnace is one of the oldest and simplest types of melting unit used in the foundry. The furnace uses a refractory crucible which contains the metal charge. The charge is heated via conduction of heat through the walls of the crucible. The heating fuel is typically coke, oil, gas or electricity. Crucible melting is commonly used where small batches of low melting point alloy are required. Capital outlay of these furnaces makes them attractive to small non-ferrous foundries. Crucible furnaces are typically classified according to the method of removing the metal from the crucible. The Three basic classes of crucibles are: Lift-out type; Tilting type and Bale-out type (stationary type).

The lift-out type is a method whereby the crucible is placed in a furnace and heated sufficiently to melt the metal charge. When the metal is melted, the crucible is lifted out of the furnace and used as a pouring ladle. Tilting type is a method in which the molten metal is transferred to the mould or ladle by mechanically tilting the crucible and furnace body. Bale-out furnace or stationary furnace is a method in which the crucible is stationary and the molten metal is ladled from the crucible to the mould (Atlas Foundry Company Inc, 2001-2010).

Furnace based on Mode of Heat Transfer:

(i) Open place furnace
(ii) Heated through medium.

Furnace based on Waste Heat Recovery:

(i) Recuperative furnaces
(ii) Regenerative furnace

Tuyere

A tuyere is a tube, nozzle or pipe through which air is blown into a furnace or hearth to increase the working temperature. Air or oxygen is injected into a hearth under pressure from bellows or a blast engine or other devices. This causes the rise in temperature in the blast than it would otherwise have been, enabling melting or smelting of metals made hot enough to be worked in a forge. This applies to any process where a blast is delivered under pressure to make a fire hotter (Gale, 1972).

Refractory Materials

Refractory materials are materials that retain their strength at high temperatures. They are used in linings for furnaces, kilns, incinerators and reactors. They are also used to make crucibles. Refractory materials can be classified based on chemical composition, method of manufacture, physical form or according to their applications.

Refractory based on Chemical Composition are: Acidic refractories used in areas where slag and atmosphere are acidic. They are stable to acids but attacked by alkalis. The second types are natural refractories used in areas where slags and atmosphere are either acidic or basic and are chemically stable to both acids and bases. While the third types are Basic refractories used in areas where slags and atmosphere are basic, they are stable to alkaline materials but react with acids.

The next classification is based on method of manufacture in form of: dry press process, fused cast, hand moulded, formed (normal, fired or chemically bonded), Unformed and Un–formed dry veritable refractories.

The next classification is based on physical form i.e. Shape: this refractories have fixed

size and shapes. It may be further divided into standard shapes and special shapes. Standard shapes have dimensions that are used by most refractory manufacturers and are generally applicable to kilns or furnaces of the same types. Special shapes are specifically made for particular kilns or furnaces. Secondly, we have the Unshaped (monolithic refractories): these are without definite form and are only given shape upon application. These types of refractory are better known as monolithic refractories.

Materials and Method

The research methodology used for this study is experimental; using product development procedure as suggested by Khurmi and Gupta (2004), Napgal (2002) and Adetoro (1997) this was done in line with machine design considerations, theories and calculations as suggested by Khurmi and Gupta (2006).

Design Theories, Considerations and Calculations of some Major Components

Before the production of the charcoal fired furnace a simple drawing of the furnace was made to determine some parameters:

a. The Size
b. Number of bricks needed
c. Type of opening
d. Position of the blower or fan
e. Chimney position
f. Fire box etc.

Materials

Design is generally a process of translating a new idea or a market need into detailed information from which a product can be manufactured; each of these stages requires decision about the material from which the product is to be made. The choice of material selection depends on the design and is guided by the stages of the design. In the development of this work the choice of materials was affected by the following factors (Ibrahim, 2012):

(i) Availability of the material
(ii) Physical, mechanical, chemical and dimensional properties
(iii) Economics
(iv) Business issues.

There are two major steps involved in selection of materials for design of machines and these are ranking and screening. Table 1 displays the selected materials and the attendant usage.

In the development of the major component parts of the furnace various materials were used such as mild steel, kaolin, sawdust, alkaline battery, radio motor, etc. These materials were used for components like the chimney, furnace padding, mild steel padded cover, doors hinges, blower housing, etc. Mild steel has been the best and most widely used, in building the world's infrastructure and industries (Khurmi and Gupta, 2006). Mild steel is readily available, cheaper and easy to machine and it possesses all the properties of metals - physical, mechanical, magnetic, thermal, electrical and chemical which makes it usable as stated (Khurmi and Gupta, 2004) and (Napgal, 1997).

Equipment/Tools used

The following are the equipment used for the various components: Potter's wheel, Electric Arc welding machine, Power cutter/Hand saw, Roller, Bench Vice, Guillotine, Shaping Machine, Steel rule/Measuring tape, Scribbler, Hack saw and etc.

Design Calculation and Construction

The calculation necessary for the effective construction of some major component was carried out individually with the attendant acting stresses for a function and flawless coal fired furnace.

Determination of the Volume of the Fire – box

The volume of the fire – box was established given by: $V_{fb} = L_{fb} \times W_{fb} \times H_{fb}$

Where, $L_{fb} = 550mm$
$W_{fb} = 550mm$
$H_{fb} = 550mm$

Since the fire – box has a square shape, so the length, width and height have equal dimensions.

Therefore substituting the above values into equation above,

$$V_{fb} = (550\times10^{-3}) \times (550\times10^{-3}) \times (550\times10^{-3})$$
$$= 0.1664m^3$$
$$= 166.4mm^3$$

Lining Area of the Furnace

Area of the Fire – box

Determination of area of one wall of the fire – box is $A_{fb} = L_{fb} \times W_{fb}$

Where, L_{fb} = 550mm

W_{fb} = 550mm

Therefore, $A_{fb} = (550\times10^{-3}) \times (550\times10^{-3})$

= 0.303m

= 303mm^2

Total Area of the Fire – box

Since the fire – box is a square shape with six equal sides, and then the total area of the fire – box expression is: $T_{fba} = A_{fb} \times 6$

Where A_{fb} = 303mm^2

Therefore, $T_{fba} = (3.03\times10^{-3}) \times 6$

= 1.818m^2

= 1818mm^2

Surface Area of Fire - clay Bricks

The surface area of the fire – clay bricks is given by the expression $A_{fc} = L_{fc} \times W_{fc}$

Where, L_{fc} = 230mm

W_{fc} = 75mm

Substituting the values into the equation above;

$A_{fc} = (230\times10^{-3}) \times (75\times10^{-3})$

= 0.01725m

= 17.25mm^2

Total Number of Fire – clay Bricks

The total number of fire – clay bricks required to build the furnace is given by the expression $T_{fcn} = \frac{T_{fba}}{A_{FC}}$

From the result given above:

T_{fba} = 1818mm

A_{fc} = 17.25mm

Therefore, $T_{fcn} = \frac{1818}{17.25}$

= 105 bricks.

Quantity of Air Required for Combustion

The quantity of air required for combustion was determined as stated in applied thermodynamics that the oxygen applied for combustion is usually provided by atmospheric air and it's necessary to use accurate and consistent analysis of air by mass and volume.

The complete combustion of carbon to carbon dioxide is given by:

$C + O_2 \longrightarrow CO_2$ - - (1)

Where

C is the fuel,

Mass of the fuel = 7.94 x 10^{-3}kg

$C + O_2 \longrightarrow CO_2$

$12gC + (2 \times 16)g\ O_2[12 + (2 \times 16)] \longrightarrow CO_2$

$12kg\ C + 32kg\ O_2 \longrightarrow 44kg\ CO_2$

Therefore, 12kg of C requires 32kg of $O_{2;\ 7.94}$ x 10^{-3}kg of C requires x (kg) of O_2

Then $\frac{12}{7.94\times10^{-3}} = \frac{32}{x}$

$x = \frac{32\times7.94\times10^{-3}}{12}$

x = 0.025kg

Therefore mass of O_2 = 0.0254kg

For air by mass, O_2 = 23.3% (Eastop and McConket, 1993)

Where

$23.3kg\ O_2 \longrightarrow 100kg$ of air

$0.0254kg \longrightarrow \frac{100}{23.3} \times 0.0254 = 0.109kg$

Therefore mass of air = 0.11kg

But the volume of air required is given by $\rho = {}^{m}/_{v}$

Where

$\rho = density\ of\ air$ = 1.27Kg/m3

m = mass of air = 0.11kg

v = volume of air =?

Therefore $v = \frac{m}{\rho}$

$v = \frac{0.11}{1.27}$

= 0.087m^3

Design Calculation of the Blower

(a) The discharge Q is the volumetric flow rate of liquid at the exit and is given by

$Q = \frac{volume\ \ of\ air\,(m^3)}{time\ \ for\ melting\ \ 0.5kg\ copper\ \ (s)} = \frac{0.087}{3600}$

= 2.417 x 10^{-5}m^3/s

(b) Area of the nozzle equation is expressed as $A_N = \frac{\pi}{4} D_N^2$

Where

A_N = area of the nozzle

D_N = diameter of the nozzle = 0.015m

Therefore $A_N = \frac{\pi(0.013)^2}{4}$

= 0.0002m^2

(c) The head development H is determined by the relationship as in $Q = C_d A_N \sqrt{2gH}$

$H = \frac{Q^2}{C_d^2 A_N^2 2g}$

Where

Q = 0.0000242m^3/s

C_c = 0.94

C_v = 0.98

$A_N = 0.0002m^2$
g = 9.81m/s
$C_u = C_vC_c = 0.94 \times 0.98 = 0.92$
Substituting into the above equation,

$$H = \frac{(0.0000242)^2}{(0.92)^2 \times (0.0002)^2 \times (2 \times 9.81)}$$

$$= \frac{5.8564 \times 10^{-10}}{6.643 \times 10^{-7}}$$

Therefore H = 0.000882m

Specific Speed

The speed at which 1m/s wall discharge against 1m head is given by $N_s = \frac{N\sqrt{Q}}{H^{\frac{3}{4}}}$

Where N = 1600rpm
$Q = 0.0000242m^3/s$
H = 0.000882m

$$N_s = \frac{1600\sqrt{0.0000242}}{(0.000882)^{\frac{3}{4}}} = 2.87 \times 10^{10} m/s$$

Diameter of the Entrance Section

Is calculated with this equation: $D_0 = \frac{15.1\sqrt{(\Delta\lambda_0)}}{U_o N(1-\varphi)}$

Where
$\Delta = 0.85$
$U_o = 1.00$
$\lambda_0 = 1.0$
$\varphi = 0.46$
N = 1600rpm
$Q = 0.0000242m^3/s$

$$\text{Therefore } D_0 = \frac{\sqrt{(0.85 \times 1.0 \times 0.0000242)}}{1.00 \times 1600(1-0.46)}$$

$$= \frac{0.0685}{864}$$

$$= 7.9282 \times 10^{-5} m$$

Design Calculation of Impeller

Based on the maximum rotating speed of 1600rpm and volume flow rate of 0.0000242, the efficiency of the fan is given by

(a) Volumetric efficiency is given $\eta_v = \frac{1}{1+N_s^{-0.66}}$

Where
$N_s = 2.87 \times 10^{10}$

$$\text{Therefore } 1+\frac{1}{(2.87 \times 10^{10})^{-0.66}}$$

(b) Hydraulic efficiency

The hydraulic efficiency is calculated by the relation $\eta h = \frac{1-0.42}{InD_j - 0.172)^2}$

$$\text{But } D_j = 4.25 \times \sqrt[3]{\frac{0.0000242}{1600}}$$

$$= 3.92 \times 10^{-5}$$

$$\eta_h = \frac{1-0.42}{In3.92 \times 10^5 - 0.172)^2}$$

$$= 0.99\%$$

(c) Mechanical efficiency of the farm

The mechanical efficiency is calculated as $\eta_m = 0.92 - 0.95$

$$= \frac{0.92+0.95}{2}$$

$$= 0.94\%$$

(d) Gross fan efficiency is expressed as $\eta = \eta_h\eta_v\eta_m$

Where
$\eta_h = 0.99\%$
$\eta_v = 0.99\%$
$\eta_m = 0.94\%$

Therefore gross efficiency $\eta = 0.99 \times 0.99 \times 0.94 = 0.92\%$

Fan Power Input

The farm power input is given as $p = \frac{Q\rho_{air}\, gH}{1000\acute{l}}$

Where
Q = 0.0000242
$\rho = 1.27kg/m^3$
g = 9.8m/s
$\acute{l} = 0.92\%$
H = 0.000882

$$p = \frac{0.0000242 \times 1.27 \times 9.81 \times 0.000882}{1000 \times 0.92} = \frac{2.66 \times 10^{-3}}{920}$$

$= 2.89 \times 10^{-10}$ KW

Calculation of the Fan Torque

The fan torque is given by the equation $T = \frac{60P}{2\pi N}$

Where
$P = 2.89 \times 10^{-10}$kW
N = 1600rpm

$$\text{Therefore } T = \frac{60 \times 2.89 \times 10^{-10}}{2\pi \times 1600} = 1.725 \times 10^{-12} \text{ N-m}$$

Construction and Assembly

After the calculation of the major components each was constructed following the results of the calculation. The fabrication and construction simply indicates the processes and means by which various components of the furnace were made. The processes include bench working, machine work, welding work and foundry work. Figure: 1 and 2 depicts a complete isometric and orthographic assembly after production.

The Frame: Angle bar of mild steel was selected and used to construct a frame of about 550mm by 550mm. The metal was cut into four of pieces of 550mm each; the pieces were then welded together by the use of electric arc welding machine to give the required frame. The formation process

includes cutting, welding and grinding of welds.

Fire-box Casing: A mild steel sheet plate of 2200mm length by 550mm width was cut and folded to form the fire-box casing and the ends were welded together using an electric arc welding machine, another two sheets of 550mm by 550mm were cut to form the cover and the base of the fire-box.

Chimney: The chimney was made of cylindrical shape from a 2mm thick mild steel sheet. A 500mm length by 300mm width sheet was cut out and rolled using a rolling bending machine and the sheet was bent to form a circular shape. The meeting ends were welded and a cylinder of 500mm height was formed. Kaolin (clay) was used to plaster round the inside of the chimney making a thickness of 50mm all through. The chimney, after completion was welded to the firebox.

Handle: A mild steel rod of 40mm diameter and 400mm length was cut and welded to the firebox. The length was selected in order to reduce the heat loss by conduction.

Impeller: The impeller is made up of 2mm thick mild steel sheet, for air resistance and wobbling reduction.

Tuyere: A mild steel pipe of 500mm length and 300mm diameter was cut and welded to join the casing to the firebox.

Refractory Bricks: The refractory bricks of British standard size of (230 x 110 x 75) mm were moulded by using Kaolin (clay). The Kaolin was mixed with saw dust and water; this was allowed for fourteen (14) days to aged and enables it set as a proper insulating material. It was fired (burnt) in a kiln at a temperature of about 1260^0C as the as the main refractory part; used to line the inside of the furnace firebox.

Blower Case: The volute casing was made from 2mm thick mild steel sheet, the base plate, the top plate and the casing width were cut after making the development of the main steel sheet.

A cover plate of volute cross section, cover and side plate were then cut and welded together. A hole was cut (axial to the Tuyere) to allow the Tuyere be welded successfully, the welding process undertaken here was electric arc welding process.

The crucible: The Crucible material (kaolin) was mixed with water and allowed for fourteen days to set and form a proper binder, after which it was placed on the potter's wheel and the required dimensions of the crucible were set on the wheel and it was rotated until the required shape of the crucible was formed. It was allowed to dry in four days and then placed on a kiln and fires to a temperature of 1200^0C and allowed to cool by air before been taken out of the kiln for use.

Finishing and Assembling

After construction of the various components that made up the entire furnace, grinding and filling all fabricated parts to ensure proper filling was made. All the members were assembled in a unit.

Testing

The procedures for testing were done in two phases that is under No load and Full load testing.

i. **No Load Test:** In this test, the blower was set to run freely for some minutes without been loaded. This was aimed at checking free run, vibration tendency, noise and leakage.
ii. **Full Load Test:** In this test, charcoal was placed in the combustion chamber of the assembled furnace with the copper inside the crucible and the coal was ignited, the blower was also put on and allowed for (1:37hr) one hour thirty seven minutes.

Production Processes from Brick, actual Development to the testing of the Furnace

The Plates I to IX depict the processes of brick [production, furnace development up to the testing of the furnace to melt the copper wire. Under no load and load condition the furnace performance was successful. It was observed that the copper melted to molten state at 1080-1083^0C by the heat generated by burning of the coal as indicated in Table 2.

The formulas below were used to determine the efficiency and productivity of the developed furnace.

Efficiency $= \frac{Mass\ of\ the\ melted\ \ copper}{Mass\ of\ the\ charge\ \ (copper\ )} \times 100 =$ 80%

Productivity $= \frac{Mass\ of\ the\ melted\ copper}{Melting\ time} =$ $0.26 kg/\ hr$

This project has indeed reduced the continuous dependent of our nation on foreign products. The furnace can be effectively and efficiently used for small batches of waste copper, aluminium and other metals of melting temperature of less than 1083^0C.
The main problem of this research has been solved. The gap that existed in the theoretical and practical practice is now bridged. This would enhance effective learning and transfer of learnt/ acquired skills from the university to the labour market or wherever it might be needed.

Conclusion

The technical expertise of the Ceramist and the Mechanical Engineers has been brought to bear in the design and development of a successful charcoal fired furnace. A synergy indeed has been established; if this is sustained more enduring researches can be carried out. This would actualise one of the many objectives of learning in the world of great walls in fields yet very closely netted that they can't be independent.

With extensive work on the design analysis, selection of materials for component evaluation and construction, it is reasonable to state categorically here that the aims and objectives of undertaking this project work have been achieved.

The research was aimed at exploring the need arising in application of appropriate technology in the design and construction of a coal-fired furnace for melting of waste copper wires. The project can be effectively and efficiently be used for recycling of waste copper wires of (500g) per batch. A portable coal-fired furnace for laboratory purpose has been designed which incorporates an electronic motor to supply the required air for complete combustion. It takes about 1.37hrs to melt 0.5kg of copper using 5.3kg of charcoal and temperature of 1080-1083^0C. The cost of production of the furnace was very low in contrast to the existing ones; also the size of the furnace was reduced appreciably that makes it fit for laboratory use. The furnace therefore will be accessible by students and intending researchers. Above all, its portability, ease of dismantling and assembling is an achievement derived from the work.

Table 1: selected Materials and the Attendant Uses

S/N	Furnace Component	Material Selected
1	Frame/Casing	Mild Steel
2	Stand	Mild Steel
3	Chimney	Mild Steel
4	Handle	Mild Steel
5	Impeller	Mild Steel
6	Tuyere	Mild Steel
7	Refractory Brick	Kaolin (Clay)
8	Blower Case	Mild Steel
9	Crucible	Kaolin (Clay)

Source: Udoka, 2012

Table 2: Results of Full Load Test

S/N	Mass of fuel(kg)	Mass of the charge (copper) (kg)	Mass of the melted copper (kg)	Mass of the impurities (kg)	Melting time (hr)	Efficiency (%)	Temp. ^{0}C	Productivity (kg/hr)
1	5.3	0.5	0.4	0.1	1.37	80	1080-1083	0.29
2	3.7	0.4	0.33	0.07	1.20	82.5	1080-1083	0.27
3	2.8	0.3	0.23	0.07	1.10	76.7	1080-1083	0.21
Average				0.08		80	1081.5	0.26

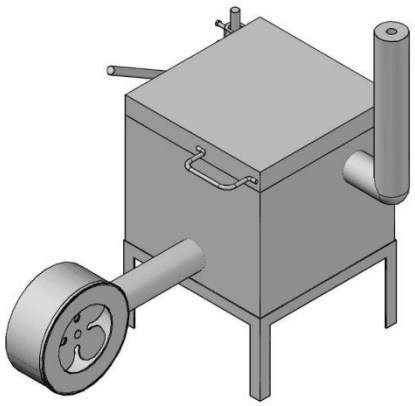

Figure Ia: Assembly Isometric image of furnace

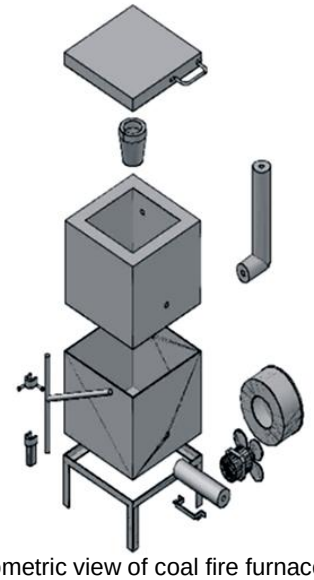

Figure Ib: Exploded Isometric view of coal fire furnace

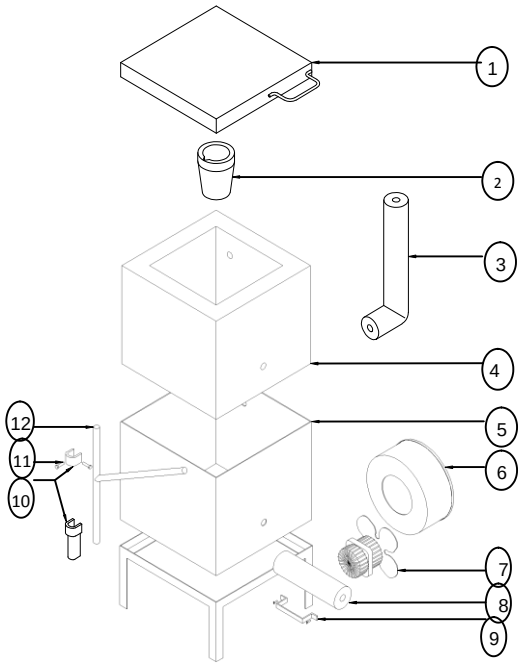

PART LIST	
SN	PARTS
1	FIREBOXCOVER
2	CRUCIBLE
3	CHIMNEY
4	FIRECLAYBRICKS
5	FIREBOX
6	BLOWERCASE
7	BLOWER(FAN)
8	TUYERE
9	BLOWERSUPPORT
10	HANDLEGUARD
11	BOLT
12	HANDLE

Figure Ic: Exploded Orthographic view of coal fire furnace



Plate I: Dry-mixed Kaolin and sawdust



Plate II: Compounded brick body wrapped to age



Plate III: Produced Standard British size bricks



Plate IV: Sub drying of moulded bricks



Plate V: Sealing of bricks seams after building



Plate VI: Complete open assembled furnace



Plate VII: Charging and lighting of furnace to test-run



Plate VIII: Furnace with heated charcoal before inserting crucible



Plate IX: Furnace with crucible containing copper wire before melting



Plate X: Complete assembled furnace before painting



Plate XI: Complete opened assembled furnace after painting

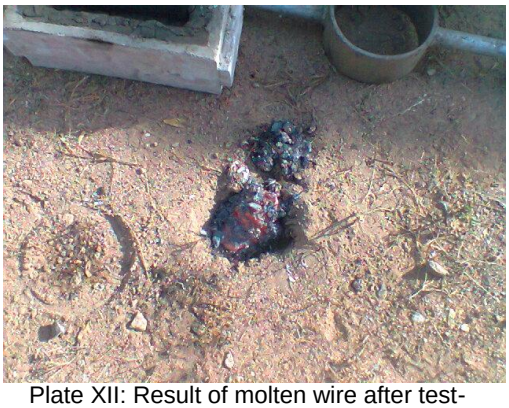

Plate XII: Result of molten wire after test-running the performance of the furnace

References

Adetoro, S. A. (1997). *Research techniques for projects proposals, reports, theses and dissertations* (revised ed.). Zaria, Nigeria: ABU Press Ltd.

Atlas Foundry Company (2001-2010). Crucible furnace-basics of foundry melting furnaces. Retrieved 12 August 2012 from http://www.atlasfdry.com/crucible furnaces.htm,.

Courtney, J. V. (1980). *Workshop processes and materials*, New York, USA: Van Nostrand Reinhold Company.

Enggpedia, (2012). Furnace-types of furnaces/classification of furnaces, Accessed 17 August 2012, from http://www.enggpedia.com/chemical-engineering-encyclopedia/dictionary/thermodynamics/1778-Furnace-types-classification-of-furnace.

Furnace (2012). http://en.m.wikipedia.org/wiki/Reverberatoryfurnace. Retrieved 12th August 2012.

Ibrahim M. E. (2012). A note book of iron and steel making.

Khurmi, R. S., & Gupta, J. K. (2006). *A machine design textbook*, eurasia publishing house (PVT) Ltd, New Delhi.

Khurmi, R. S., & Gupta J. K. (2004). *A textbook of machine design:* New Delhi, India: Eurasia Publishing House (pvt) Ltd.

Khurmi R. S. (2002). *A textbook of strength of materials*. New Delhi: S Chand and Company Ltd.

Maurya, R. K. (2002). *A Text book of Physical Metallurgy*, S Chand and Company ltd, New Delhi.

Gale, W. K. V. (1969). Iron and steel: A dictionary of terms. Longman Press, London.

Materials Science (2011). Encyclopædia Britannica Ultimate Reference Suite. Chicago: Encyclopædia Britannica.

Nagpal, G. R. (2002). *Machine design, (3rd ed.).* Delhi, India: Khana Publishers.

Robinson, R.W., & Holtzclaw, H. F. (1988). *General chemistry,* Massachusetts, Toronto Lexington: DC Heath and Company.

Subs. Tech. Forum-Melting Furnaces, Retrieved 12 August 2012, from http://www.Substech.com/dokuwiki/doku.php?id

Udoka, J. E. (2012). Design and construction of coal-fired furnace for recycling of waste copper wires. An unpublished thesis submitted to the Department of Mechanical Engineering, in partial fulfilment of the requirements for the award of M. Tech in Mechanical Engineering, School of Engineering and Engineering Technology, Modibbo Adama University of Technology, Yola, Nigeria, West Africa. December, 2012